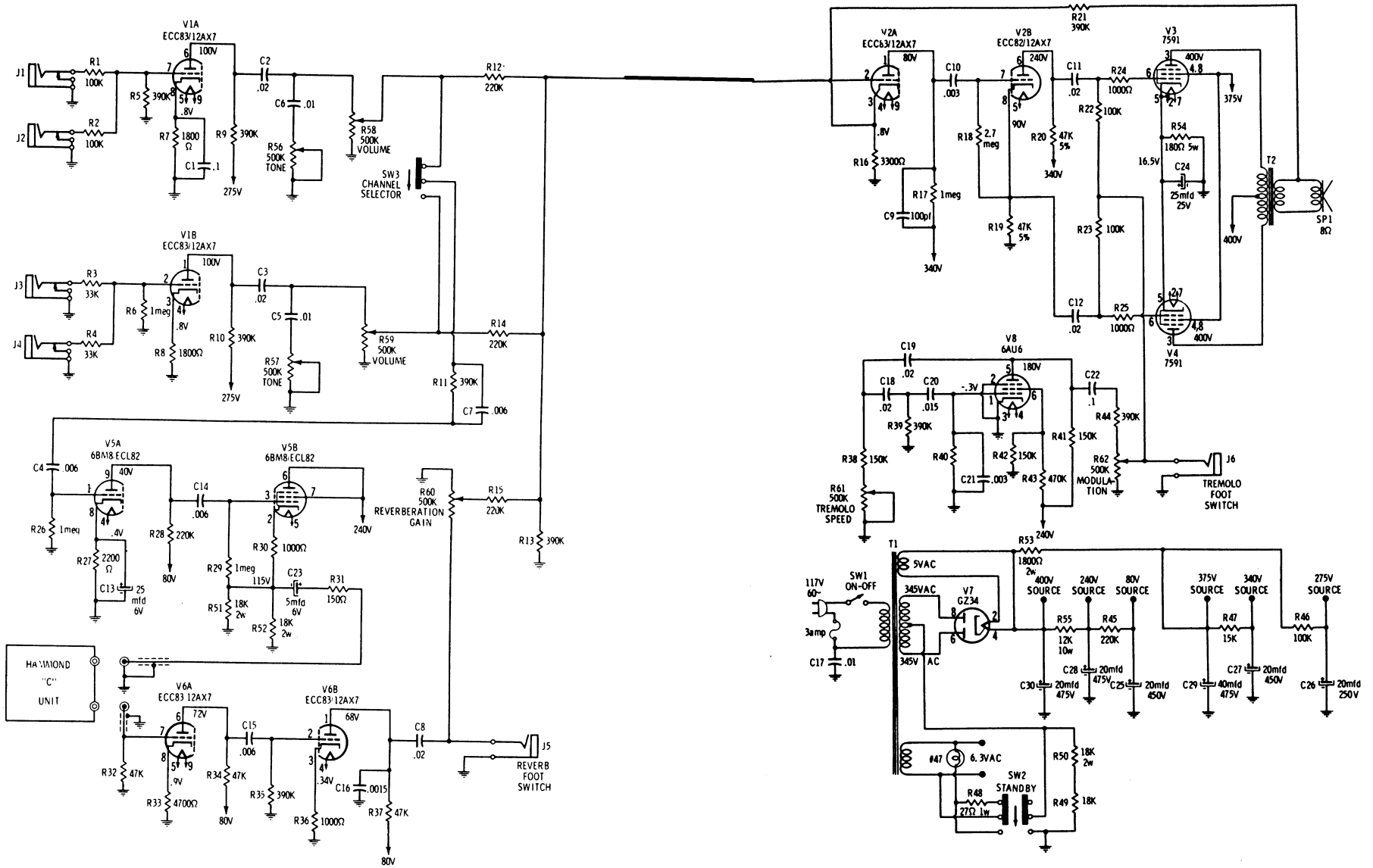
V1A
ECC83/12AX7
V1B
ECC83/12AX7
V2A
ECC83/12AX7
V2B
ECC82/12AX7
V3
7591
V4
7591
V5A
6BM8/ECL82
V5B
6BM8/ECL82
V6A
ECC83/12AX7
V6B
ECC83/12AX7
V8
6AU6
V7
GZ34
T1
T2
SP1
8Ω
SW3
CHANNEL
SELECTOR
R58
500K
VOLUME
R59
500K
VOLUME
R56
500K
TONE
R57
500K
TONE
R60
500K
REVERBERATION
GAIN
R61
500K
TREMOLO
SPEED
R62
500K
MODULA-
TION
J6
TREMOLO
FOOT
SWITCH
J5
REVERB
FOOT
SWITCH
HAMMOND
"C"
UNIT
SW1
ON-OFF
117V
60~
3amp
5VAC
345VAC
345V AC
400V
SOURCE
240V
SOURCE
80V
SOURCE
375V
SOURCE
340V
SOURCE
275V
SOURCE
#47
6.3VAC
SW2
STANDBY

Model H-311.